YANMAR

3TNM74F-SAWM



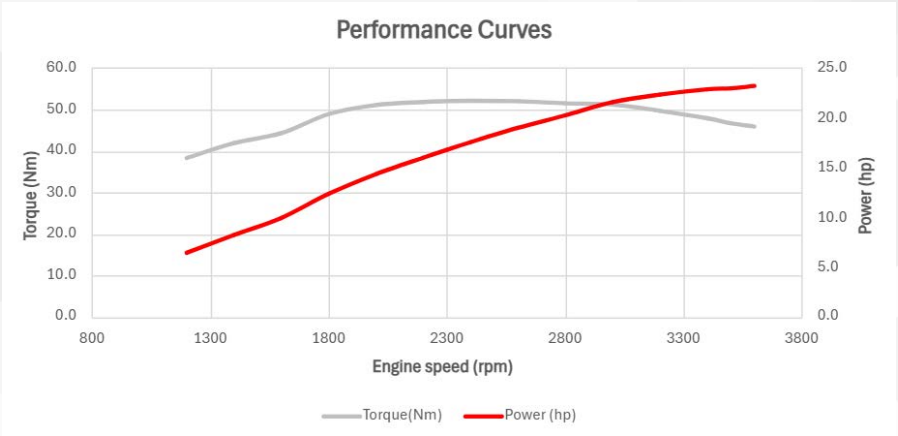

SPECIFICATION	SAWM
CYLINDERS	3
BORE X STROKE (mm)	74 x 77
DISPLACEMENT L (ci)	0.99 (61)
GROSS POWER hp (kW)	23.9 (17.8)
RATED SPEED rpm	3600
LENGTH w/fan in (mm)	19.1 (486)
WIDTH in (mm)	17.9 (454)
HEIGHT in (mm)	21.5 (545)
WEIGHT lbs (kg)	~ 196 (89)
COMBUSTION TYPE	Indirect Injection
ASPIRATION	Naturally Aspirated
GOVERNOR TYPE	Mechanical
LUBRICATION SYSTEM	2.9L Capacity Oil Pan
ELECTRICAL SYSTEM	12V-40A
FUEL SYSTEM	Inline MC Fuel Injection Pump
COOLING SYSTEM	Water Pump Belt Driven
POWER TAKE OFF	FWH:Backplate FW: PC 130 5 x M8x1.25

Pure. Reliable. Power.

STAGE 5 CERTIFIED

4 FINAL TIER 4 EPA certified

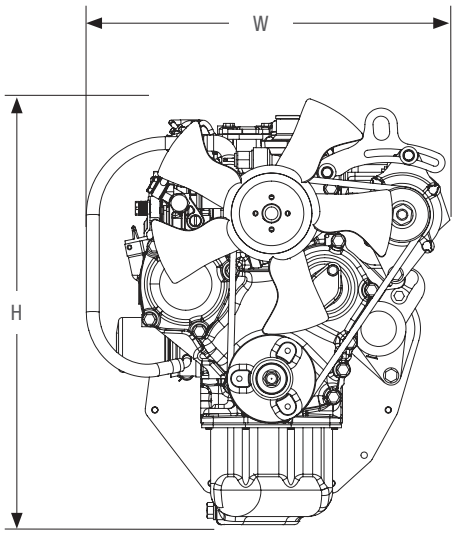

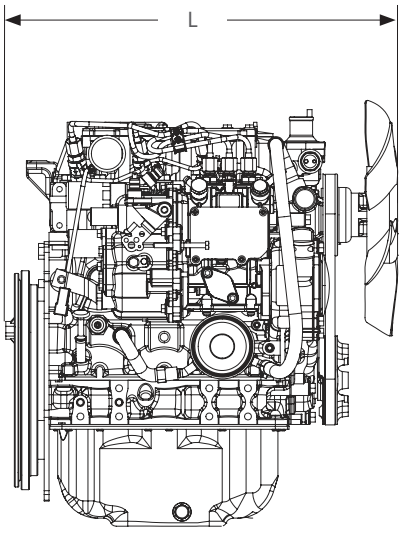

NOW EVEN MORE RELIABLE

The YANMAR line of Final Tier 4 engines continues to build upon the legendary reliability of the YANMAR TNV line with a focus on vibration reduction and high-strength materials. The result is an engine more than capable of handling the most demanding applications.

FINAL TIER 4 AND EU STAGE 5

Building off the proven TNV design, YANMAR has achieved superior exhaust emissions by improving the combustion chamber and increasing the displacement and compression ratios. YANMAR engines meet the strict NTE and NRTC test requirements for Final Tier 4 and EU Stage V.

BETTER FUEL EFFICIENCY, FEWER EMISSIONS

YANMAR continues its reputation for superior starting characteristics by refining the combustion process to assure more precise fuel delivery and control. The result is reduced emissions, improved performance over a wide range of applications and increased fuel economy.

PURE. RELIABLE. POWER.

YANMAR is engaged in the relentless pursuit of high efficiency, low emission, diesel engines. With technology that already meets the next generation of environmental emissions standards, YANMAR is providing sustainable solutions towards a new era of prosperity.



www.yanmar.com / 770.877.9894

©2019 Yanmar America Corporation. Engine photo may not reflect actual specifications. The information in this brochure is accurate as of the date of printing and subject to change All rights reserved by and belong to YANMAR®.

IE19-3TNM74F-SAWM-0819