YANMAR

4TN98CT-7NVT



SPECIFICATION	7NVT
CYLINDERS	4
BORE x STROKE (mm)	98 x 110
DISPLACEMENT L (ci)	3.32 (203)
GROSS POWER hp (kW)	71.5 (53.3)
RATED SPEED rpm	2500
LENGTH w/fan in (mm)	31.3 (796)
WIDTH in (mm)	24.6 (624)
HEIGHT in (mm)	42.3 (1074)
WEIGHT lbs (kg)	~ 650 (295)
COMBUSTION TYPE	Direct Injection
ASPIRATION	Turbo Charged
GOVERNOR TYPE	Electronic
LUBRICATION SYSTEM	10.5L Capacity Oil Pan
ELECTRICAL SYSTEM	12V-80A
FUEL SYSTEM	Common Rail Fuel Injection
COOLING SYSTEM	Water Pump, Belt Driven
POWER TAKE OFF	FWH:SAE 4 FW: SAE 10

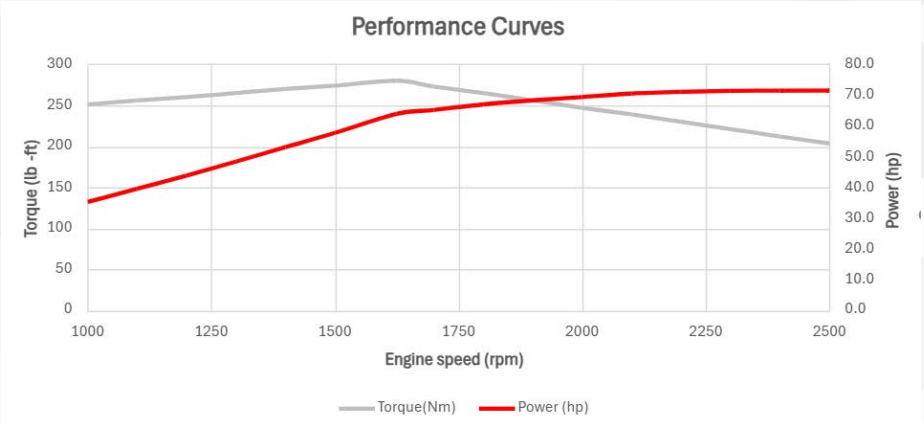

Pure. Reliable. Power.

STAGE 5 CERTIFIED

FINAL TIER 4 EPA certified

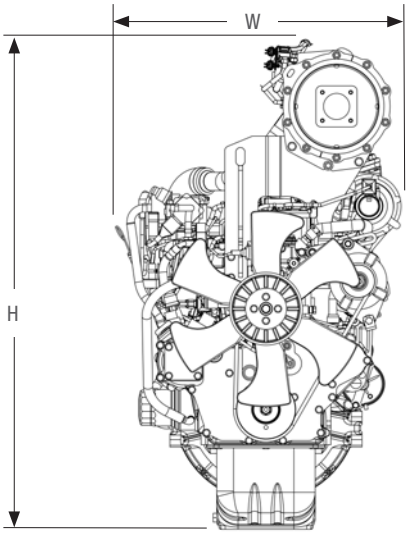

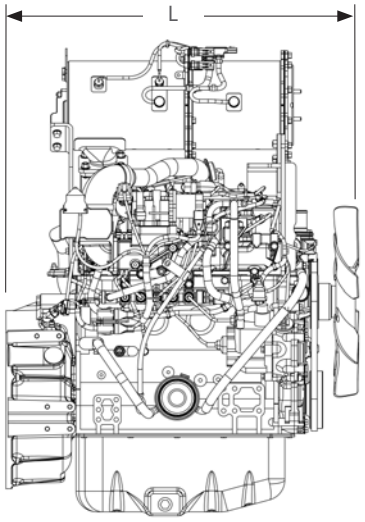

NOW EVEN MORE RELIABLE

The YANMAR line of Final Tier 4 engines continues to build upon the legendary reliability of the YANMAR TNV line with a focus on vibration reduction and high-strength materials. The result is an engine more than capable of handling the most demanding applications.

FINAL TIER 4 AND EU STAGE 5 COMPLIANT

Building off the proven TNV design, YANMAR has achieved superior exhaust emissions utilizing common rail direct-injection, exhaust gas recirculation, precise ECU engine control and a diesel particulate filter. YANMAR engines are compliant with EPA Tier 4 Final and EU Stage V regulations allowing customers to use a common platform for highly regulated sales regions.

BETTER FUEL EFFICIENCY, FEWER EMISSIONS

YANMAR continues its reputation for superior starting characteristics by refining the combustion process to assure more precise fuel delivery and control. The result is reduced emissions, improved performance over a wide range of applications and increased fuel economy.

ADVANCED PROVEN TECHNOLOGY | Diesel Particulate Filter (DPF) system

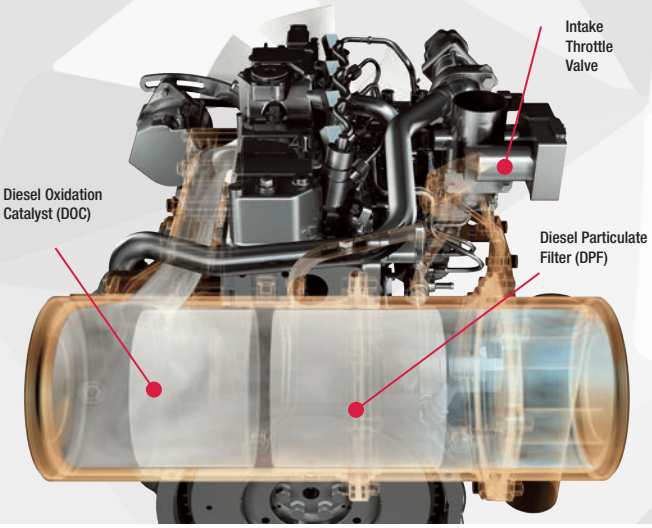

AUTOMATIC REGENERATION

No down time or “out of service” time for cleaning or servicing filters. YANMAR’s DPF regeneration technology provides seamless operation for the customer.

ROBUST DESIGN

While other engines use Mass Air Flow Sensors, YANMAR uses more reliable Pressure and Temperature sensors for superior DPF monitoring and EGR control.

MORE FLEXIBILITY

YANMAR does not require the use of an after-cooler on most turbo models and allows for more options with air filter placement, providing OEM’s more design flexibility at a lower cost.

www.yanmar.com / 770.877.9894

©2019 Yanmar America Corporation. Engine photo may not reflect actual specifications. The information in this brochure is accurate as of the date of printing and subject to change. All rights reserved by and belong to YANMAR®.

IE19-4TNV98CT-NVT-0819